ANSYS AIM Eddy Current / Magnetic Frequency Response - Physics Setup

Authors: Joshua Wallace, Steve Scampoli

Physics Setup

Click on **Physics** in the workflow. In the **Physics** template input a **Frequency** of 200Hz.

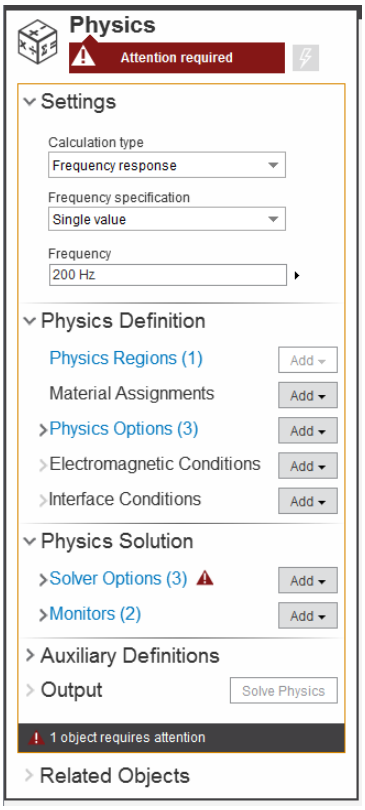

Specify Material

Click on **Add**, next to **Material Assignments** > **Material Assignment** > **Air (Material Samples)**. Next, click on body selection in top right corner. Select the **Surrounding region** and click **Add**. This assigns air to the surrounding region.

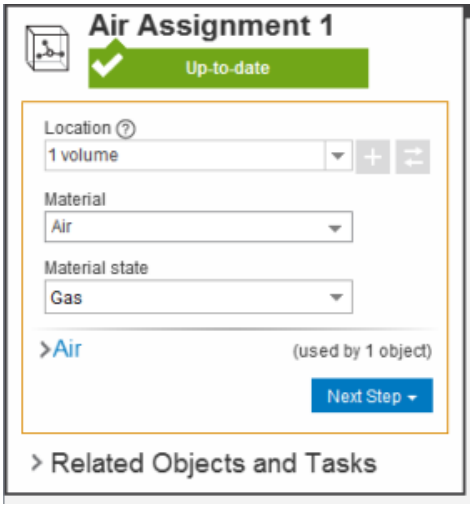

Repeat the above steps except assign **Copper (Material Sample)** to the coil and **Aluminum Alloy (Material Sample)** to the plate. In order to make this process easier. Right click on surrounding region and select **Hide Body**.

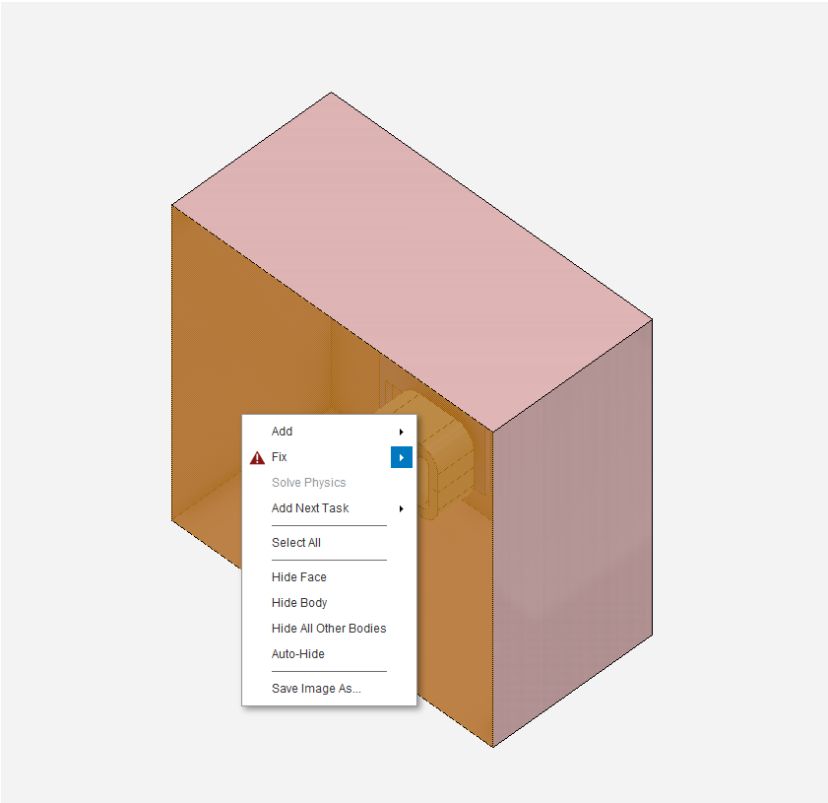

Boundary Conditions / Forces

Since a current is running through the copper coil, a current condition will need to be created. Right click > **Add** > **Electromagnetic Conditions** > **Current**. Then select the face below for the **Cross-Sectional face or body**.

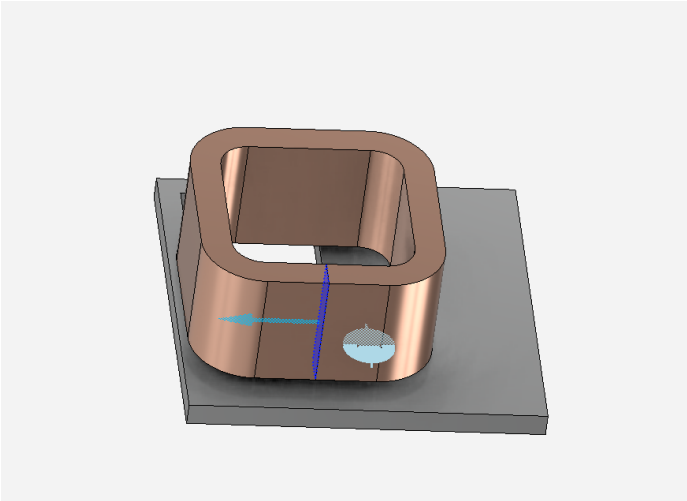

Input an **Operating Current** of 2.742 Amps and 1000 for **Number of Conductors**.

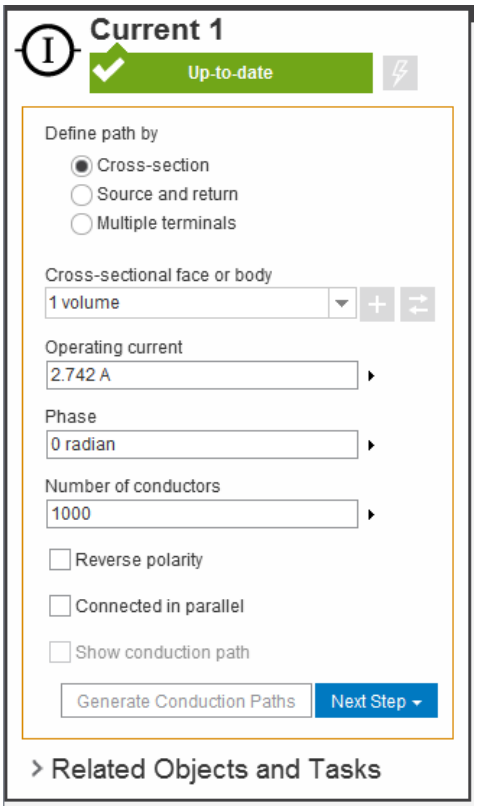

Finally, a **Skin Depth Resolution** needs to be specified. Right click, and select **Fix**. Select the top face of the plate and move the **Resolution** slider up to **F ine**. The **Skin Depth Resolution** will automatically refine the mesh where the eddy currents occur.

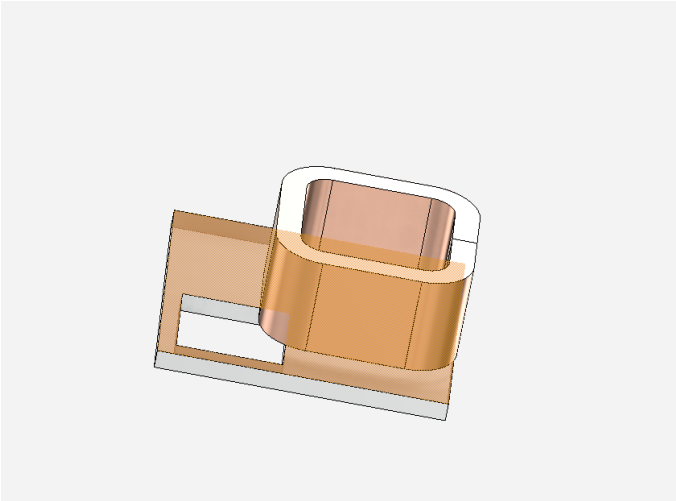

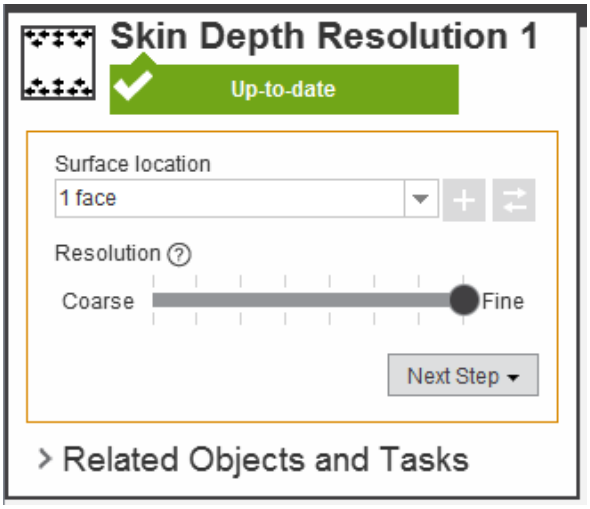

Go to Step 4: Numerical Solution/Results

Go to all ANSYS AIM Learning Modules