ANSYS Forces in Permanent Magnets - Physics Setup

Author(s): Joshua Wallace & Steve Scampoli, ANSYS Inc.

Physics Setup

AIM will automatically create an enclosure around the geometry. In order to see the inside geometry click on **Physics** > click on the box > right click on the box > **Hide Body**.

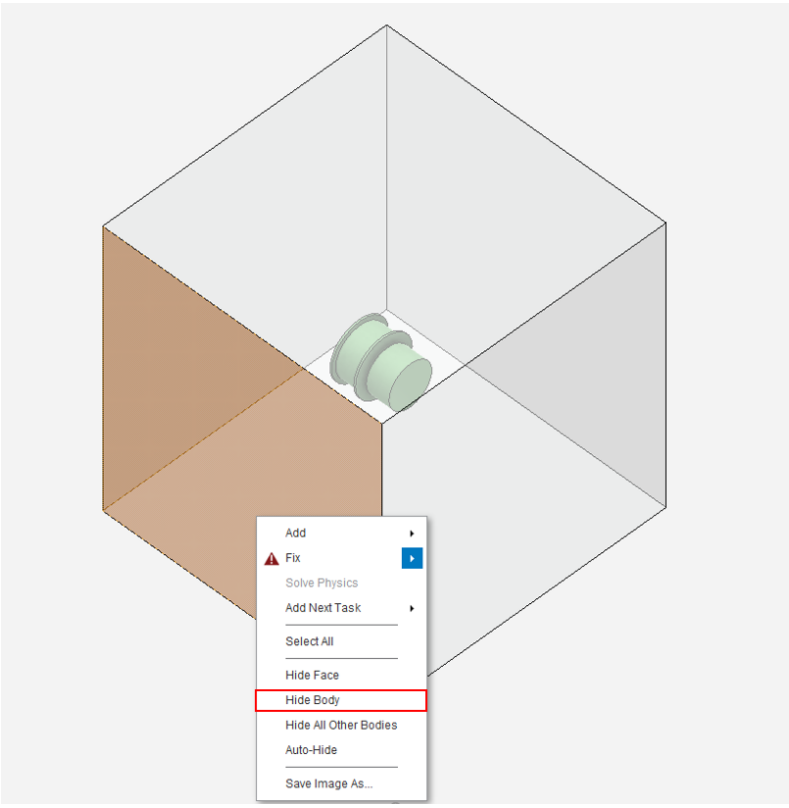

Specify Material

Click on **Add**, next to **Material Assignments** > **Material Assignment** > **Copper (Material Samples)**. Next, click on the **body selection** tool in top right corner. Select the coil and click **Add**. This assigns copper to the coil.

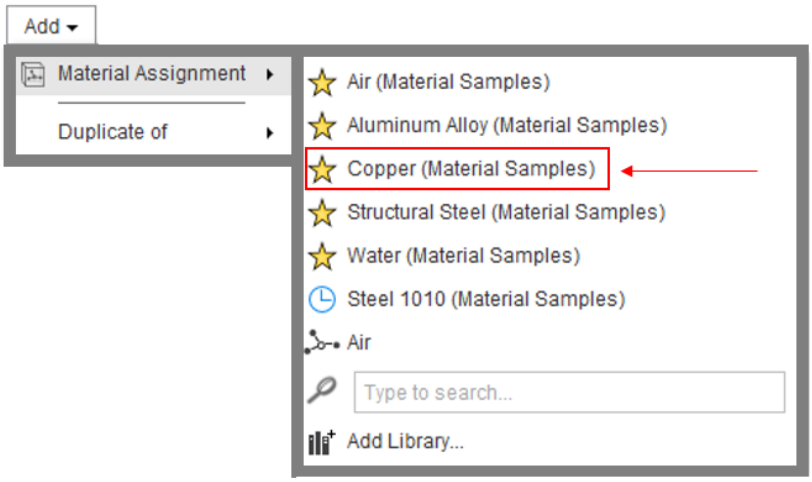

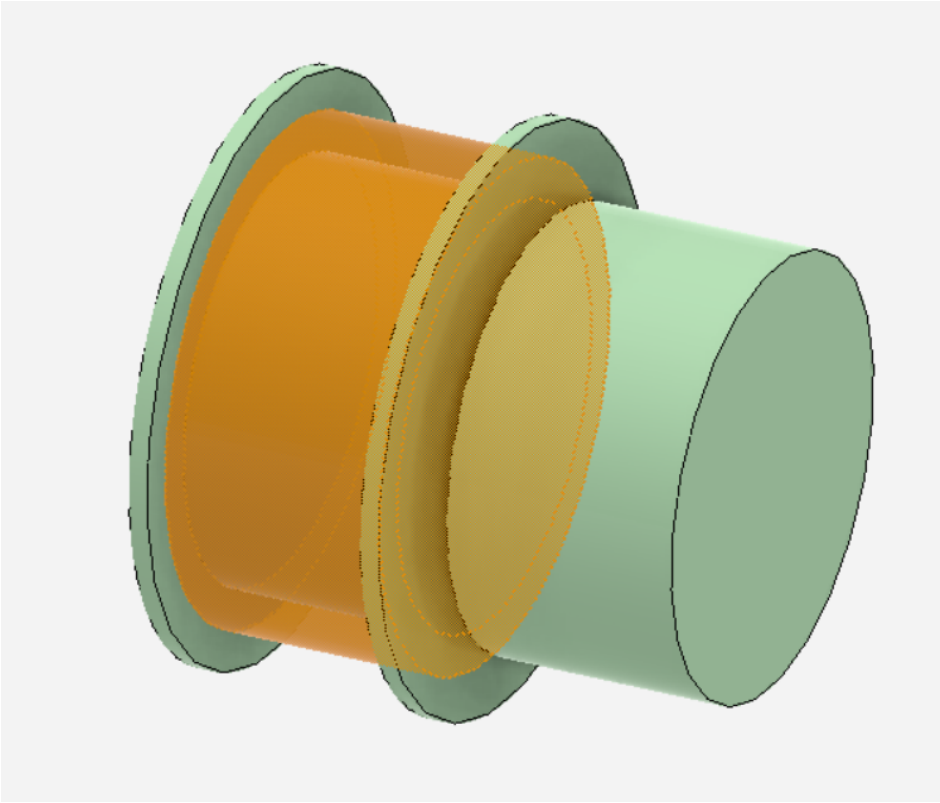

Then, click on next step and repeat the process. Assign **NdFe30 (Material Samples)** to the magnet and **Brass (Material Samples)** to the spool. (You can use “Type to Search” to find NdFe30 and Brass in the material library.)

Boundary Conditions / Forces

Now force computation must be set up. Click **Next Step** > **Fix** > **Force Computation**. Select the magnet using body select and click the **+**. Leave all other setting in default condition.

Since a current is running through the copper coil, a current condition will need to be created. Right click > **Add** > **Electromagnetic Conditions** > **Current**.

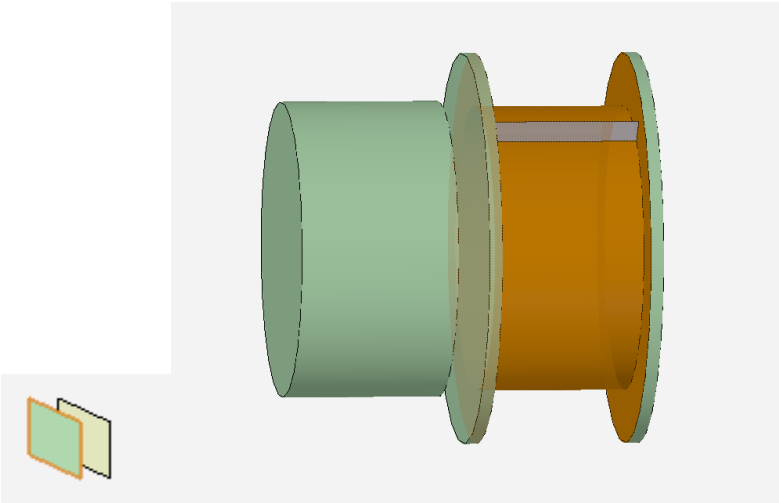

Select the surface by looking for the line in the line that runs perpendicular to the spool face. Click on the plane below the line by using the plane selector. Then input a **Current** of .01 amps and 280 for the **Number of Conductors**. Click on the arrow below to parameterize the **Operating Current**.

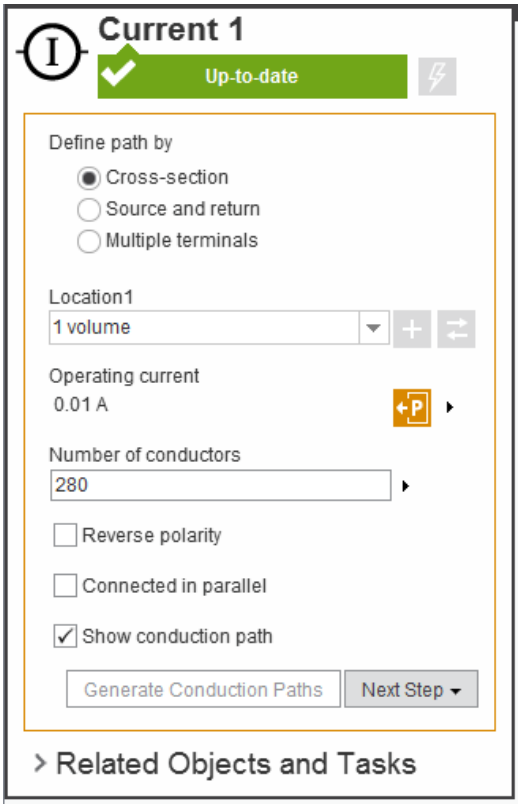

Then click on **Generate Conduction Paths**, this will show the solver interpretation of the coil. If the solver's interpretation of the coil is incorrect (current is flowing outside of the coil) insulating boundary conditions must be added to ensure that the current stays within the coil. Since the solvers interpretation of the coil is incorrect (current is also flowing in the brass spool), insulated boundary conditions will be added.

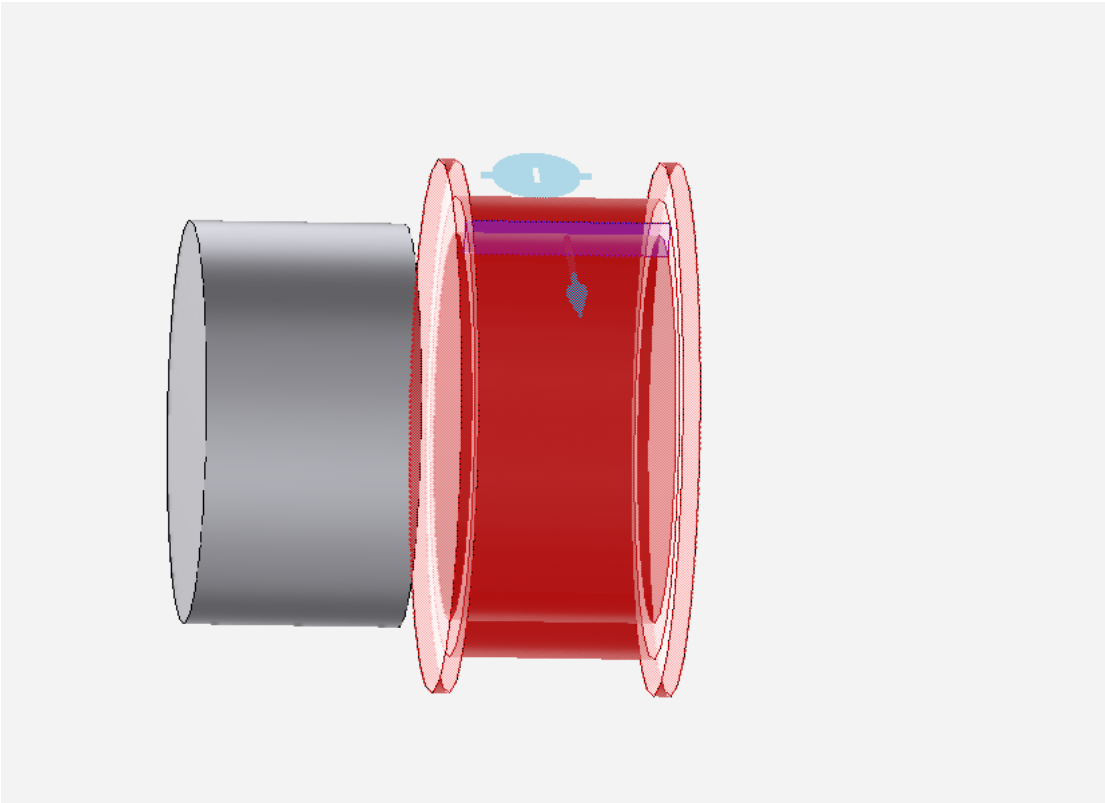

Right click > **Add** > **Electromagnetic Conditions** > **Insulating**. Click on the three inside faces of the brass spool. Hiding the coil geometry will make this step easier.

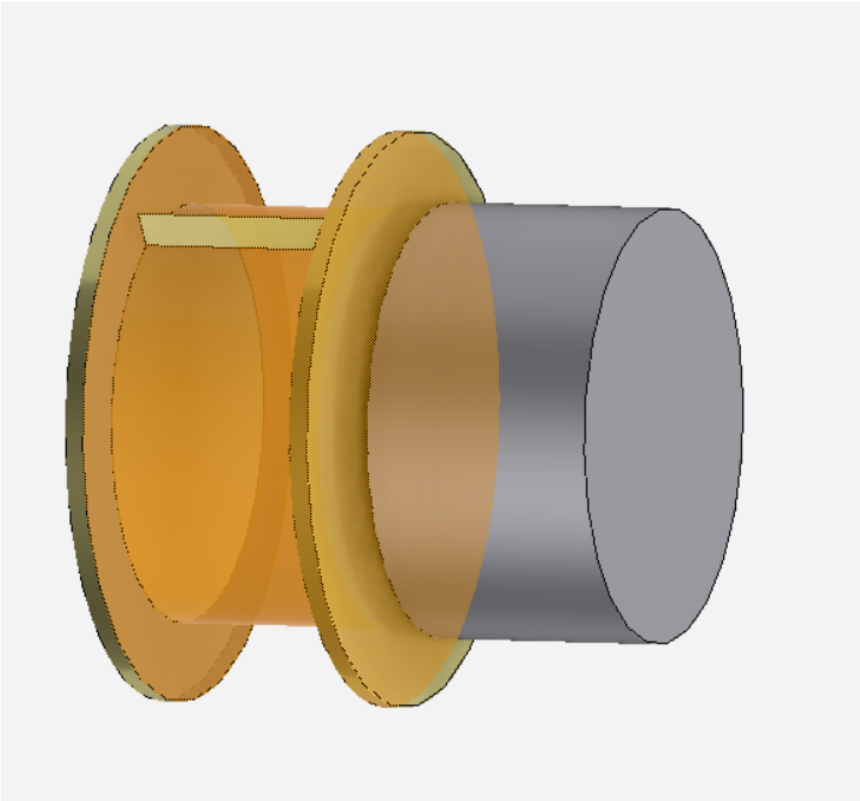

In order to check that insulating condition worked, click on **Physics** > **Electromagnetic Conditions** > **Current 1** > **Generate Conduction Paths**.

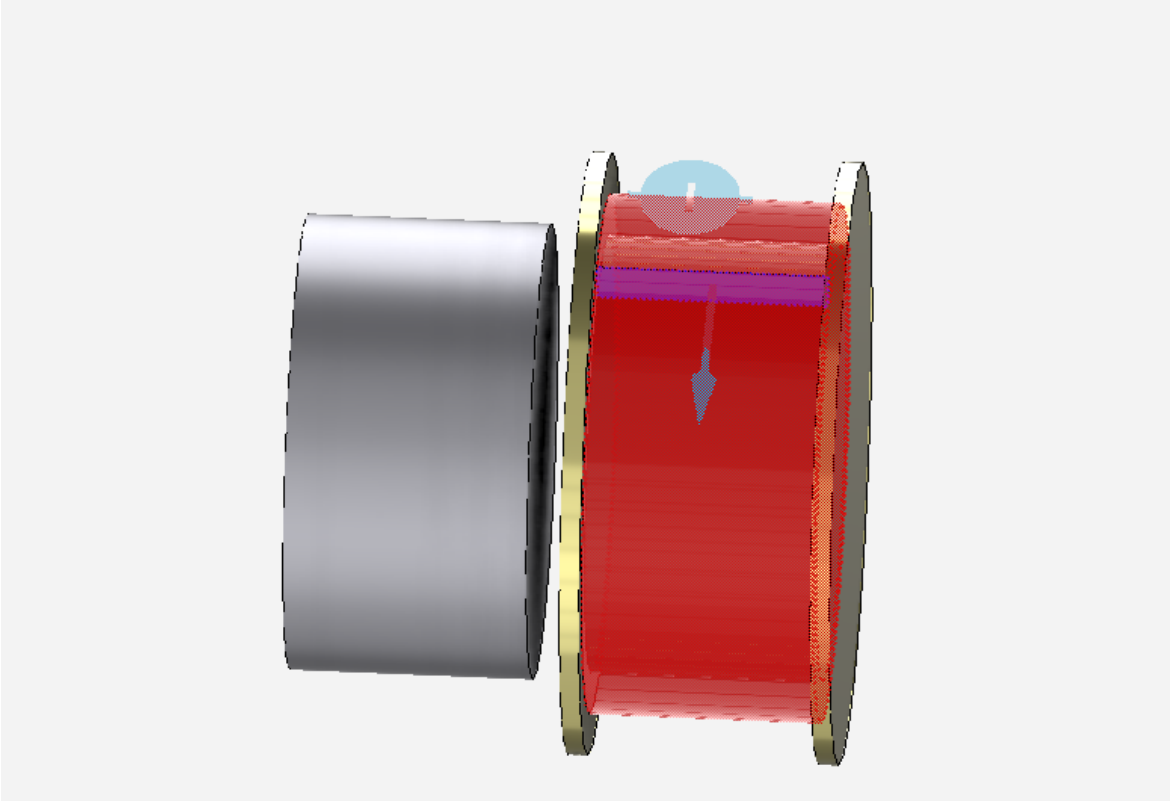

The solvers' new interpretation of the coil is correct. Case one will now be set up.

Go to Step 4: Case Setup

Go to all ANSYS AIM Learning Modules