# Modal Analysis of a Composite Monocoque - Numerical Results

Author: Jingsi Wu, Cornell University



## Numerical Results

Ansys results for tangential displacement is shown in the picture below:

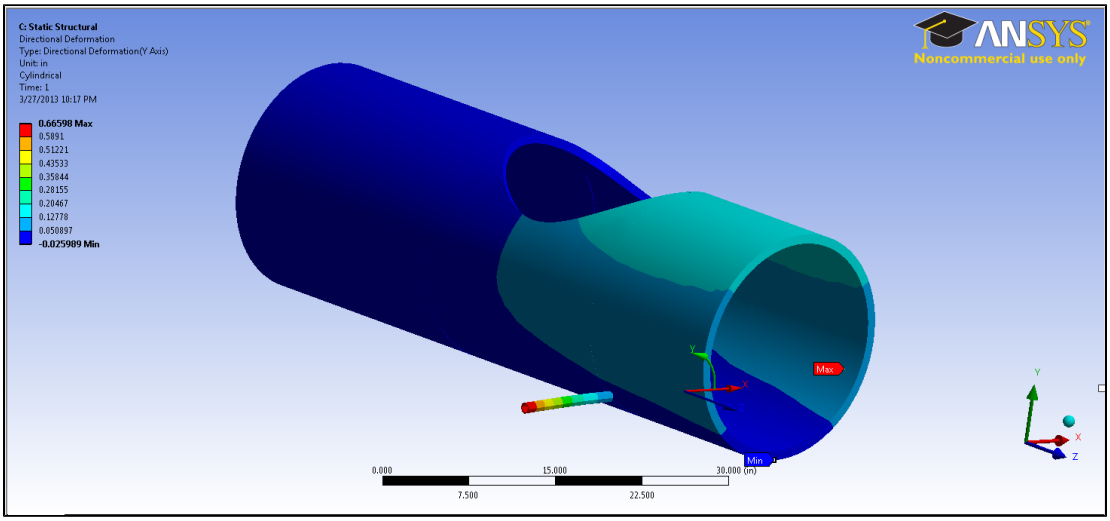


The maximum tangential deformation occurs at the tip of the suspension links, which is reasonable, and the tangential value is ***0.0226 inches***.

$$\theta = \frac{180}{\pi}\tan^{-1}\frac{\delta_t}{L}$$
$$\tau = F * L$$
$$k_t = \frac{\tau}{\theta}$$
$$\theta: Angle\ of\ rotation$$
$$\delta_t: Tangential\ displacement\ from\ Ansys$$
$$L: Length\ of\ the\ moment\ arm$$
$$F: Force\ applied$$
$$\tau: Torque$$
$$K_t: Torsional\ Stiffness$$

Using the equations given above, you can calculate the torsional stiffness to be ***5797.41 ft-lb/deg***.

**Go to Step 7: Verification & Validation**

Go to all ANSYS Learning Modules