Radiation Between Surfaces - Geometry

Author: Chia-Hsun Hsieh, Cornell University

Problem Specification
1. Pre-Analysis & Start-Up
2. Geometry
3. Mesh
4. Physics Setup
5. Numerical Solution
6. Numerical Results
7. Verification & Validation
Exercises
Comments

Create the shell

Sketch the shell

For users of ANSYS 15.0, please check this link for procedures for turning on the Auto Constraint feature before creating sketches in DesignModeler.

In ***Project Schematic***, double click on ***Geometry*** to open the Design Modeler. When prompted, select ***Millimeter*** as the unit.

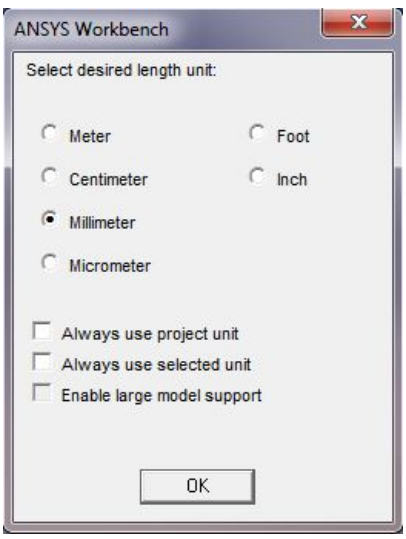

Click on the ***XY Plane*** and the ***z axis*** 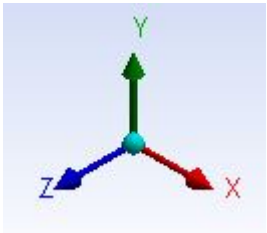

to begin sketching. Use the ***Line*** sketching tool to create a vertical line starting from the ***x axis*** . Hover the cursor around the axis until you see a symbol ***C*** to begin your sketch. The symbol C means the line is coincident with the x axis. Next, use the ***Arc by Center*** to create the dome of the shell. Hover the cursor near the ***y axis*** until you see the symbol C. Single click on the y axis and click again on the tip of the line you have just created. You should see a symbol ***P*** when you click on the vertex, which means coincident. Finally, click on the ***y axis*** again to finish the arc.

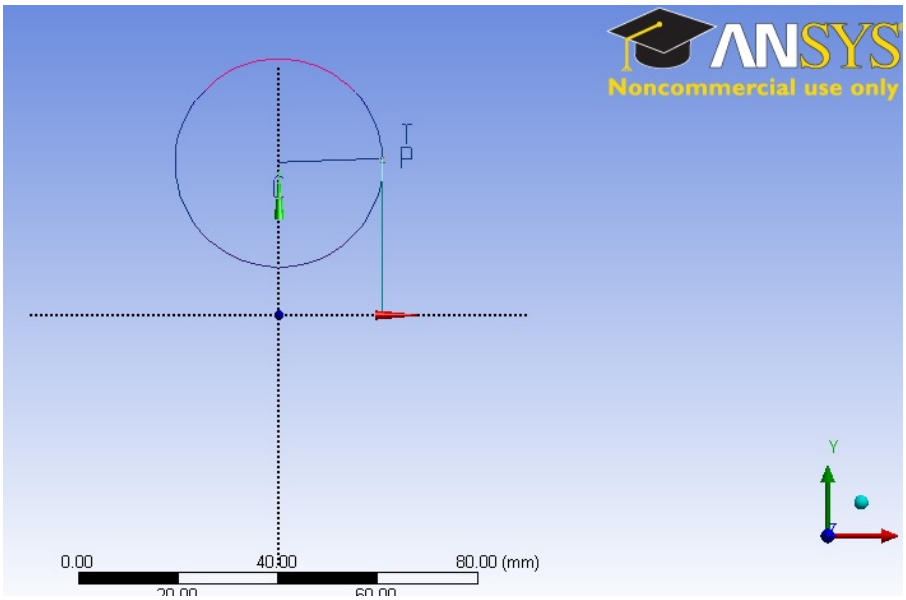

Use the ***General*** dimension tool to create dimensions for the line and the radius of the arc. The length of the line is ***30 mm*** and the radius of the arc is ***25 mm*** . Your sketch should look like this:

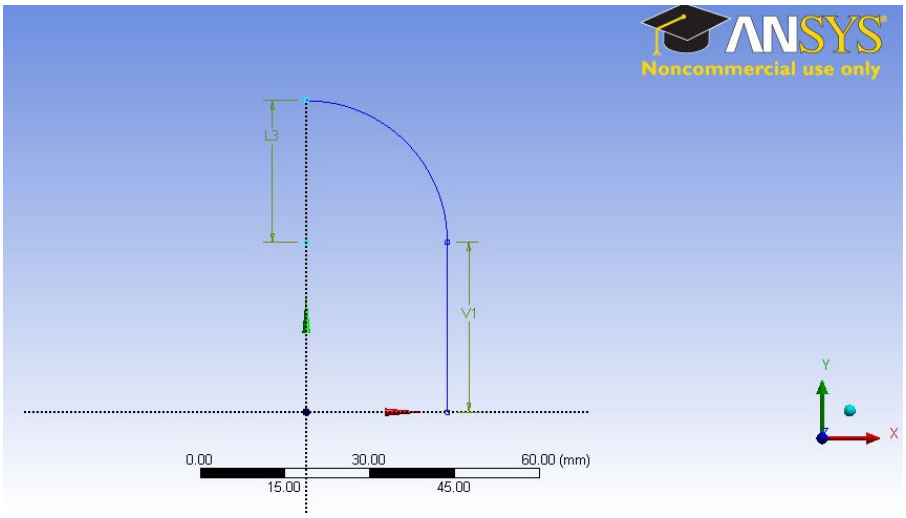

Model the shell

Click on Create from the top menu bar and select ***Revolve*** . The Revolve tool should automatically select your shell sketch for its geometry. If not, highlight the cell next to geometry and select ***Sketch1*** under the ***XYPlane*** tree. Select the ***Y axis*** for ***Axis*** . This will allow the sketch to revolve around the y axis to create a shell. Change the ***Angle*** from ***360*** to ***90*** degrees. Highlight ***As Thin/Surface?*** and change the option from ***No*** to ***yes*** . Keep the ***Inward Thickness*** to ***1 mm*** . Click on ***Generate*** .

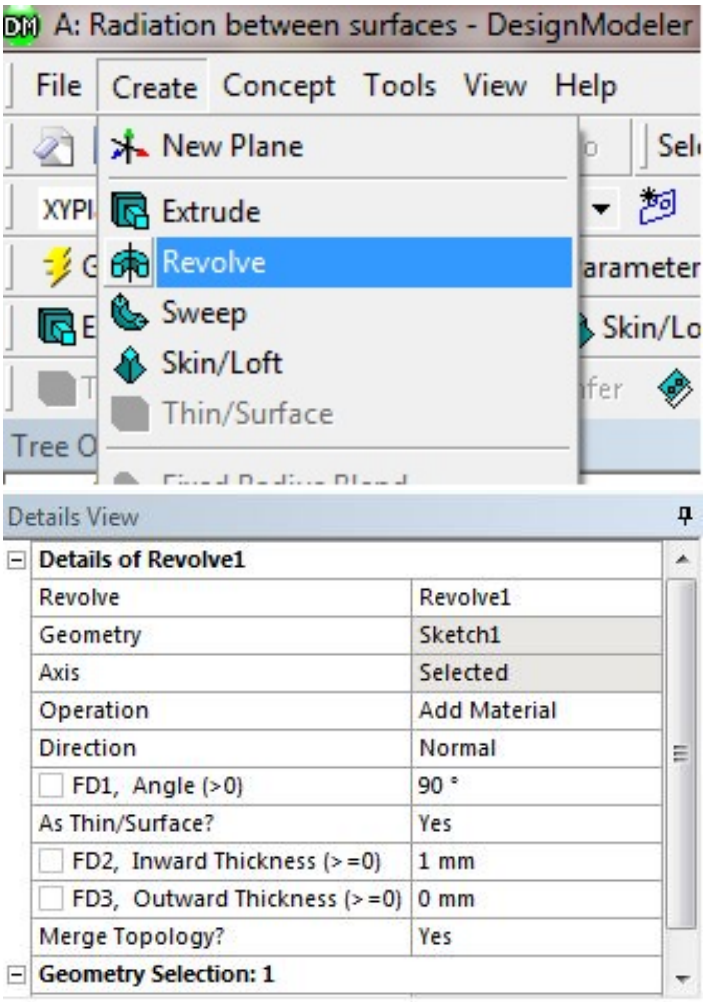

The 1/8 shell model

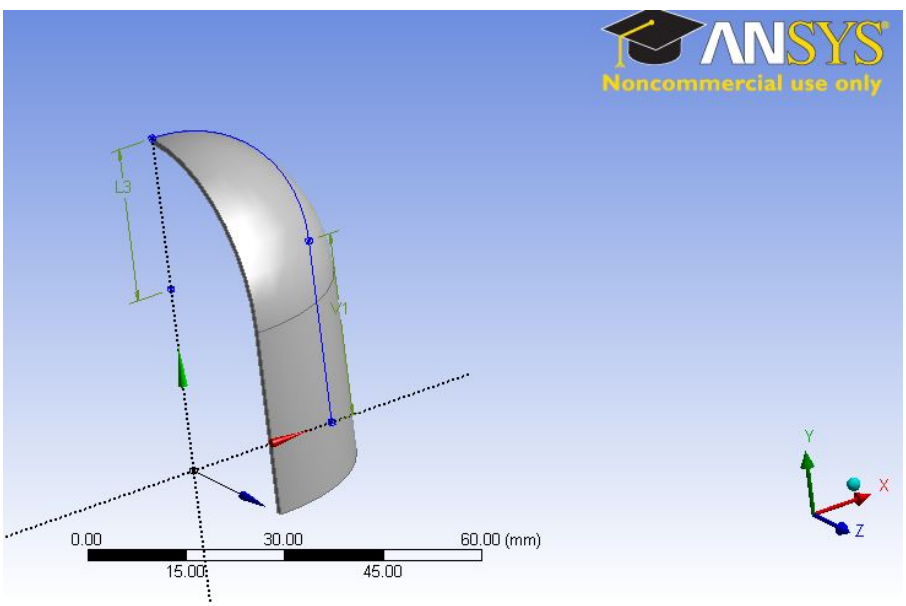

Create the Specimen

Sketch the specimen

We will create the specimen from the ZX plane. Highlight ***ZXPlane*** in the Tree Outline and click on ***New Sketch*** :

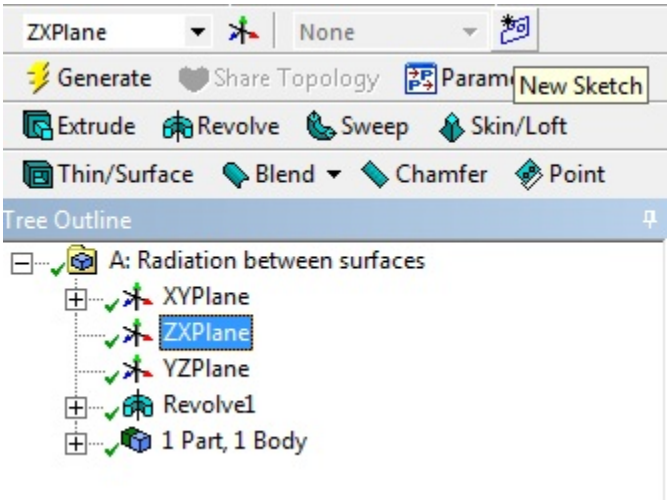

Click on the ***Y axis*** 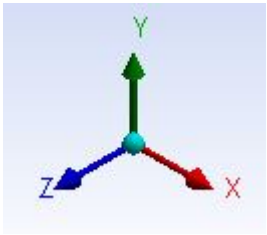

to view the ZX plane.

From the Sketching tab, use the ***Circle*** tool to draw a circle centered at the origin. Again, Make sure your cursor displays a ***P*** near the origin before you begin sketching. Next, use the ***Line*** tool to draw two lines along the ***X and Z*** axis. We only need to create a quarter of the full sketch to create the 1/8 model. Select the ***Trim*** tool and click on any sketch outside the quarter circle enclosed by the lines and the full circle. Use the ***Radius*** dimension tool to set the radius of the quarter circle to ***4 mm*** .

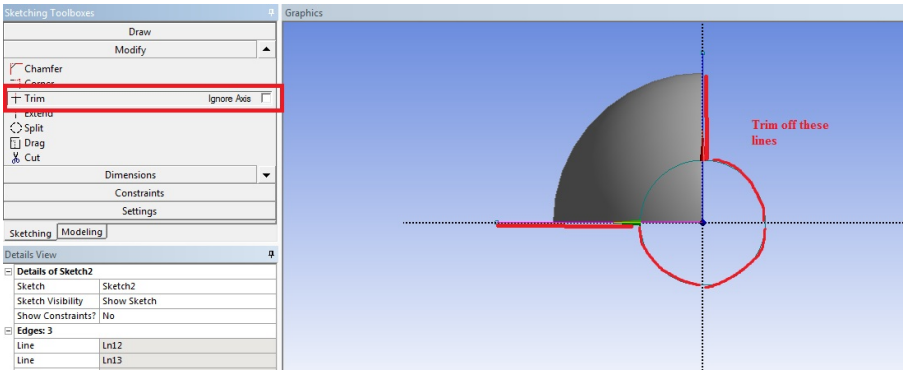

The size of the specimen compared to the shell:

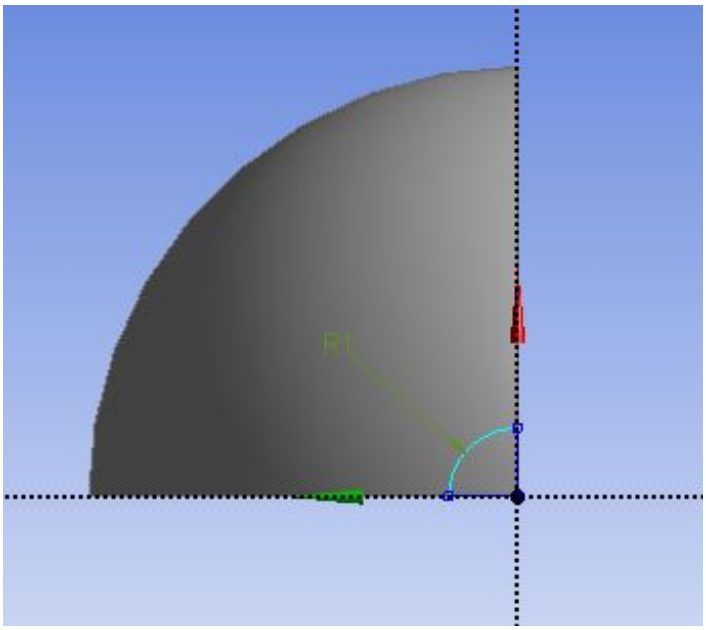

Click on the ***Extrude*** icon and select the quarter circle for the geometry. In the Details of Extrude1 window, set the ***Depth*** to ***15 mm*** .

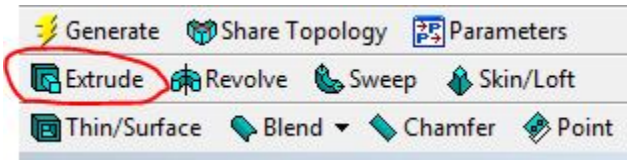

Details View

Details of Extrude1	
Extrude	Extrude1
Geometry	Sketch2
Operation	Add Material
Direction Vector	None (Normal)
Direction	Normal
Extent Type	Fixed
FD1, Depth (>0)	15 mm
As Thin/Surface?	No
Merge Topology?	Yes
Geometry Selection: 1	
Sketch	Sketch2

Once everything is specified as above, click ***Generate.*** You should see ***2 Parts, 2 Bodies*** in the Tree Outline. Your model should look like the following:

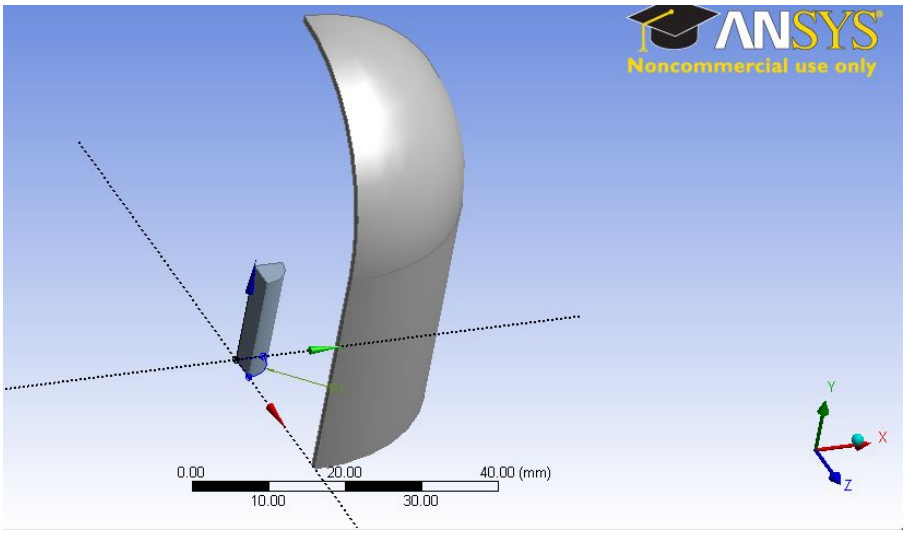

You may now close the Design Modeler and move on to the next step.

Go to Step 3: Mesh

Go to all ANSYS Learning Modules