Wind Turbine Blade - Physics Setup

Author: Ben Mullen, Cornell University

Physics Setup

This tutorial is not being updated any more. We recommend that you follow this newer tutorial on fluid-structure analysis of a wind turbine blade. Thank you!

Varying Thickness

Right click on Geometry and insert ***Thickness***. Hold down the control button and select the top and bottom surfaces of the wind blade.

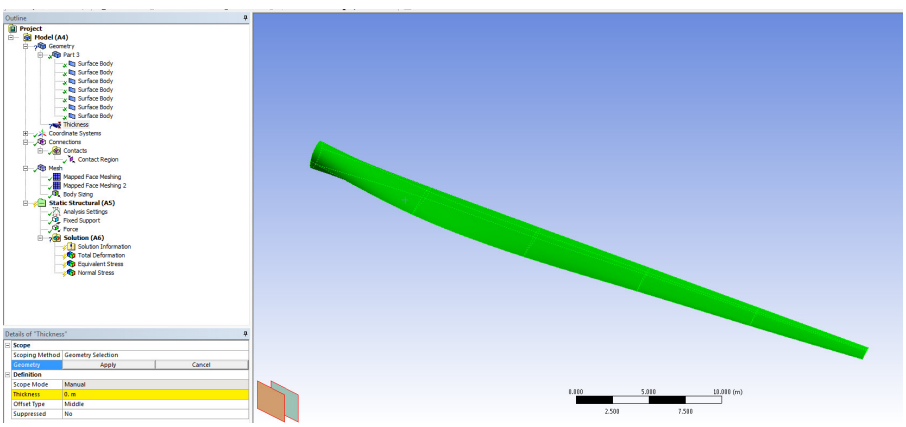

Select function from the drop down list in ***Thickness***. Enter the thickness as a function of length: 0.03-0.00048485*x. The thickness graphics will be displayed:

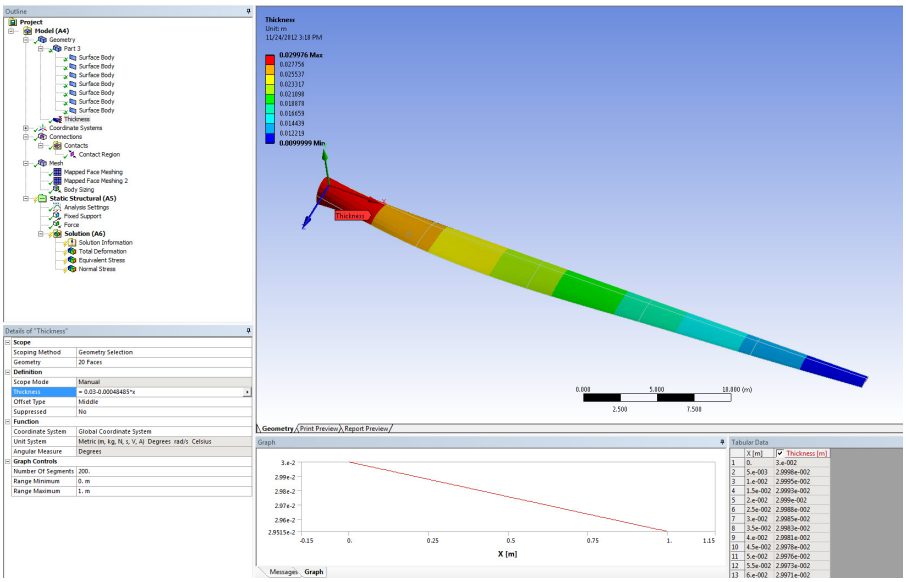

The thickness of the spar is 0.02 meters. Locate the appropriate surface bodies that represent the spar and change the thickness to 0.02 meters.

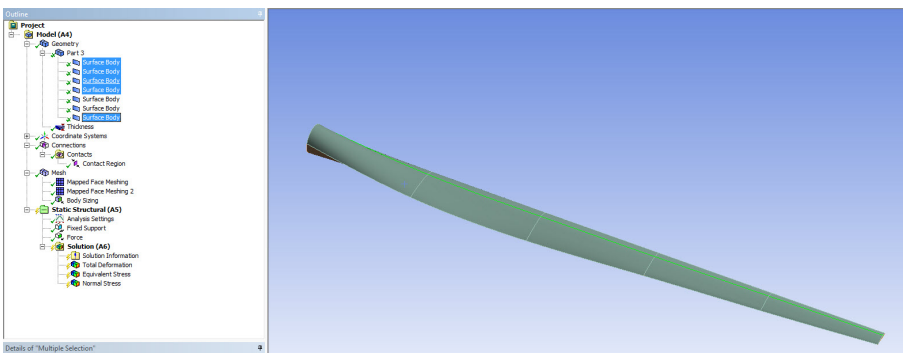

Connections

The contact between the wind blade and the spar needs to be modeled. Right click on ***Connections*** and insert a ***Connection Group***.

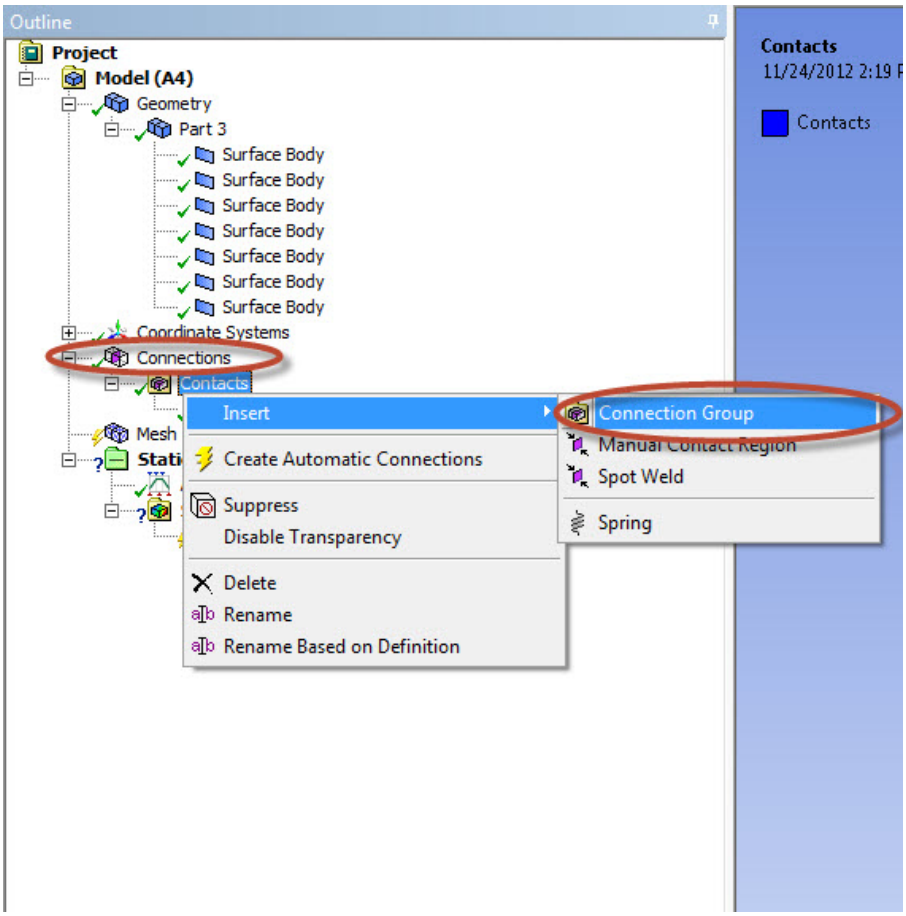

In the connection group named ***Contacts 2***, change the ***Face/Face*** detection to ***No*** and ***Face/Edge*** detection to ***Yes***.

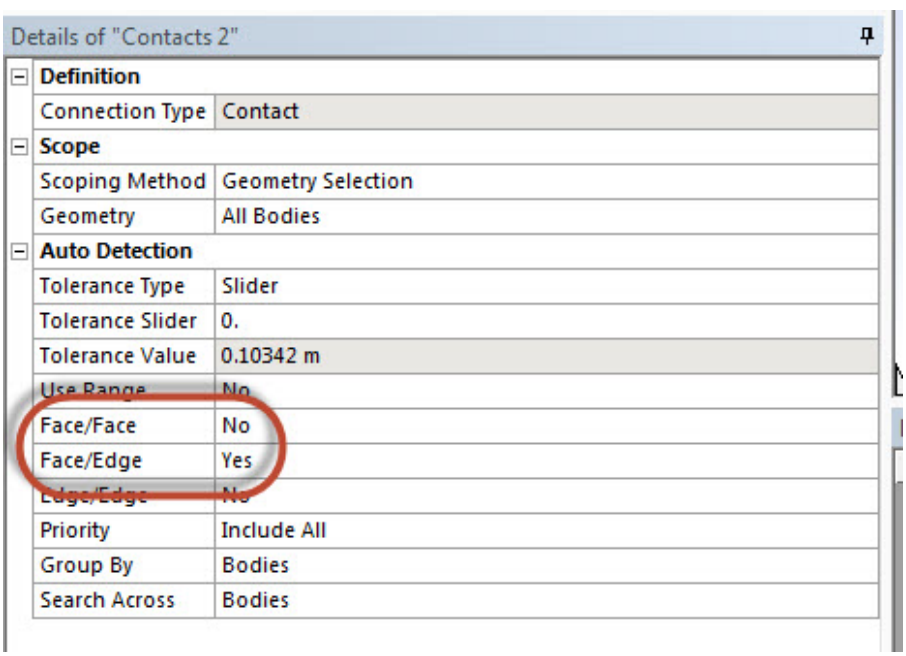

Right click on ***Contacts 2*** and click on ***Create Automatic Connections***.

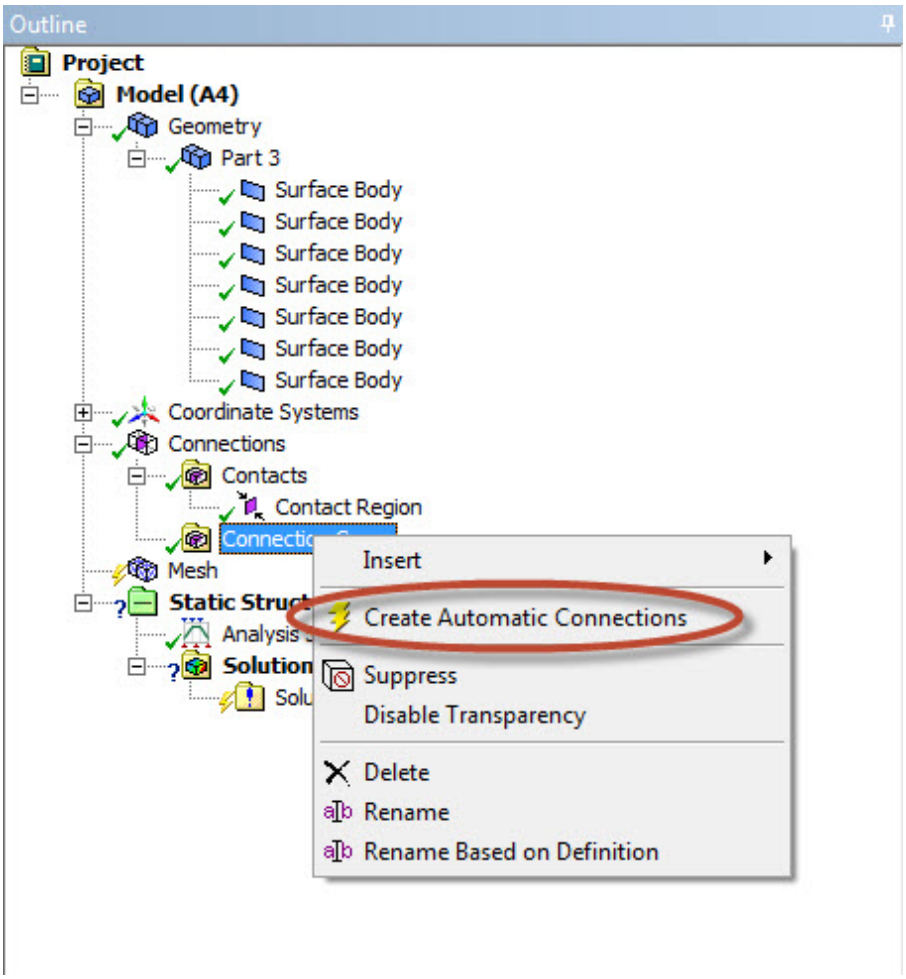

Material Properties

For each surface body, check that ***Structural Steel*** is assigned as the material.

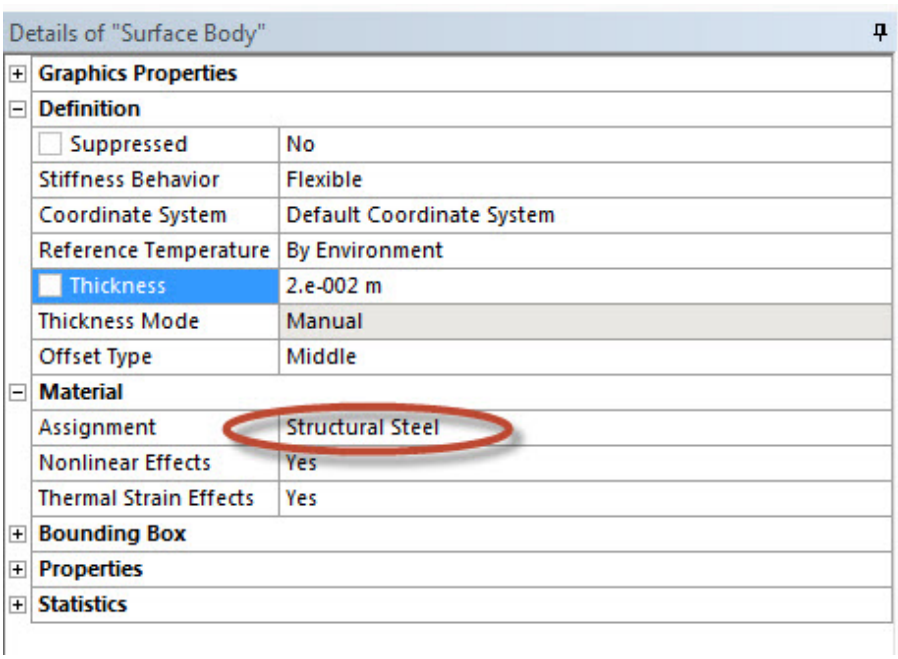

Details of "Surface Body"

Graphics Properties	
Definition	
Suppressed	No
Stiffness Behavior	Flexible
Coordinate System	Default Coordinate System
Reference Temperature	By Environment
Thickness	2.e-002 m
Thickness Mode	Manual
Offset Type	Middle
Material	
Assignment	Structural Steel
Nonlinear Effects	Yes
Thermal Strain Effects	Yes
Bounding Box	
Properties	
Statistics	

Fixed Support

We will fix the ring at the end of the blade. To accomplish this, click on ***Static Structural (B5)*** to bring up the *Environment* menu bar. In the *Environment* menu bar, select **Supports > Fixed Support**. Next, make sure the edge selection filter is selected. Hold Ctrl, and click on the 2 edges that make up the ring at the end shoulder of the blade (see image below).

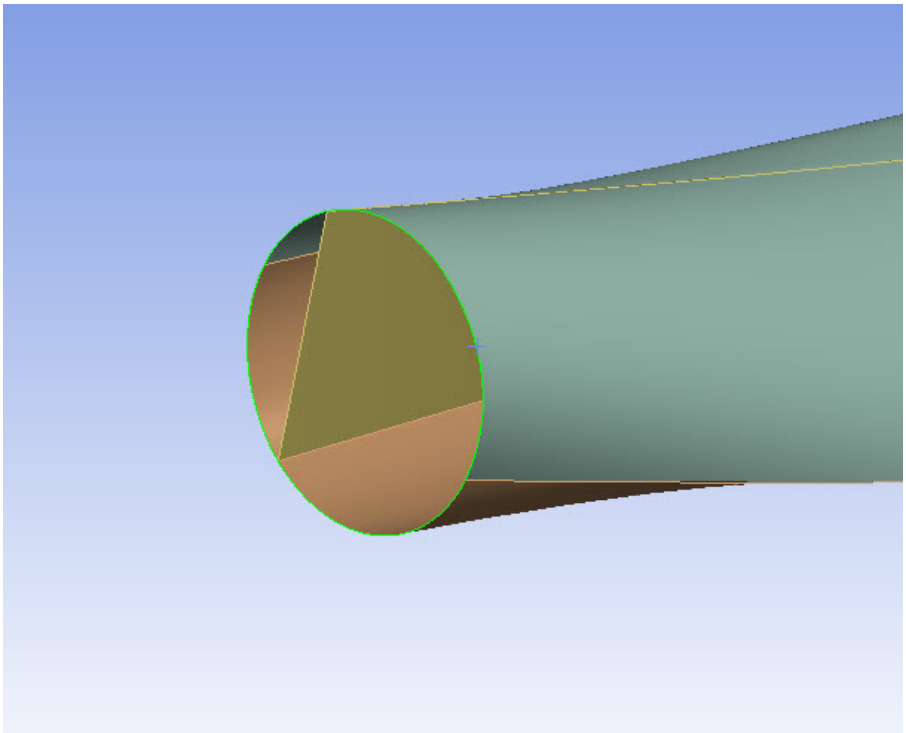

When both edges have been selected, press ***Geometry > Apply***.

Force Load

We want to apply a 1000 N downward force on the blade. To initialize a force load, in the *Environment* menu bar select **Loads > Force**. Make sure the surface selection filter is selected and choose the two upper surface of the end of blade, as shown in the image below.

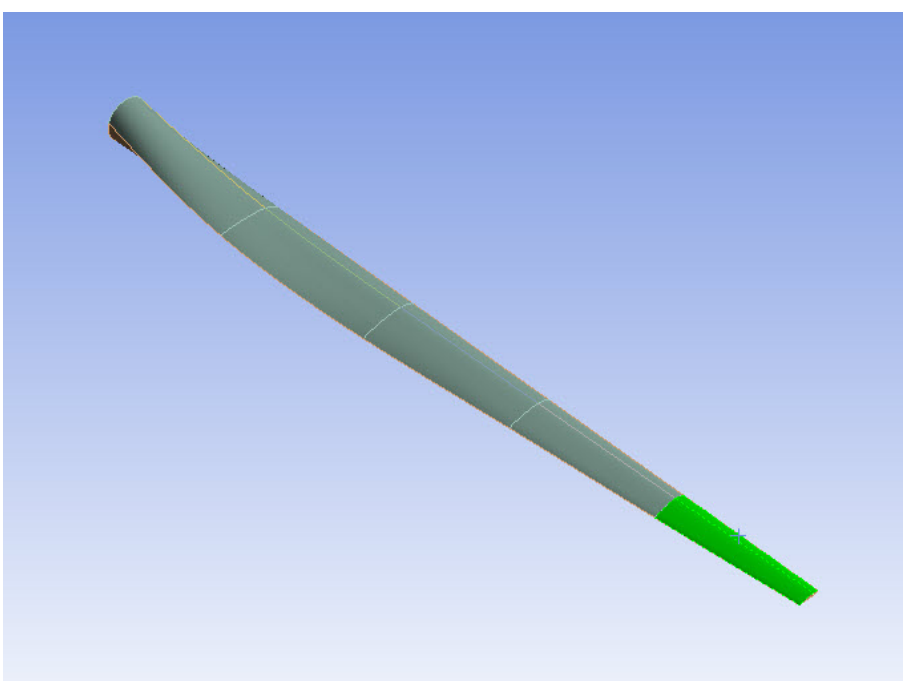

When the surface have been selected, press ***Geometry > Apply*** in the *Details* window. Next, select ***Define By > Components***. Define the ***Y Component*** as `-1000 N`.

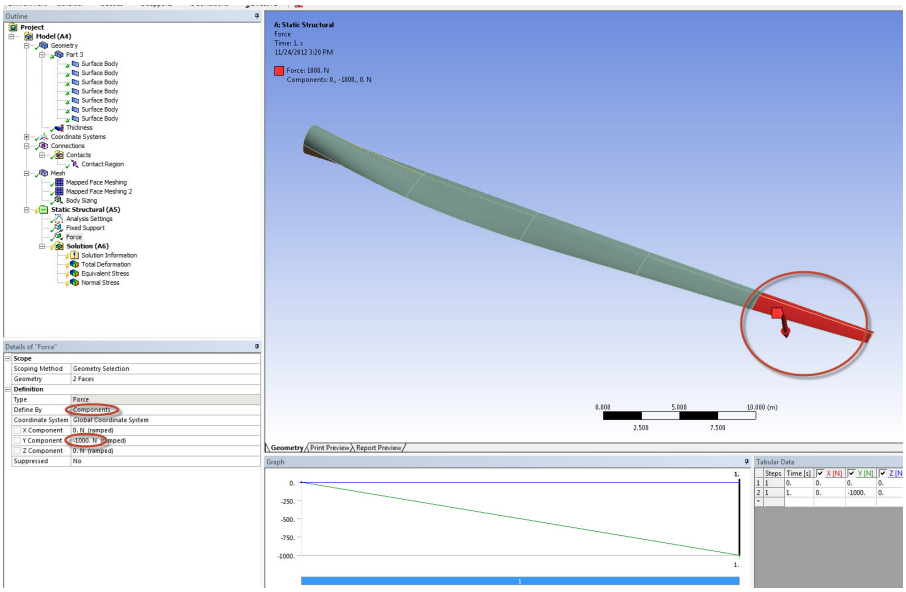

We are now ready to set up the solution and solve.

Go to Step 5: Numerical Solution

Go to all ANSYS Learning Modules