ANSYS WB - Bike Crank - Problem Specification

Author: Benjamin Mullen, Cornell University

Problem Specification
1. Pre-Analysis & Start-Up
2. Geometry
3. Mesh
4. Setup (Physics)
5. Solution
6. Results
7. Verification & Validation

Problem Specification

A bicycle crank is fitted with a strain gauge and a 100 lb force is applied. The bicycle crank's material is aluminum 6061-t6, the Young's modulus is 10,000 ksi, and the Poisson's Ratio is .33. The dimensions (in inches) of the bike crank are shown below.

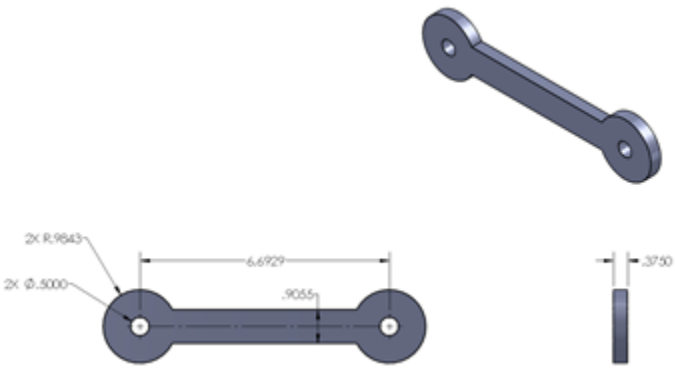

Click here to enlarge the image

The bicycle crank is loaded such that the fitting on the right is fixed while the fitting on the left is loaded with a 100 lb force.

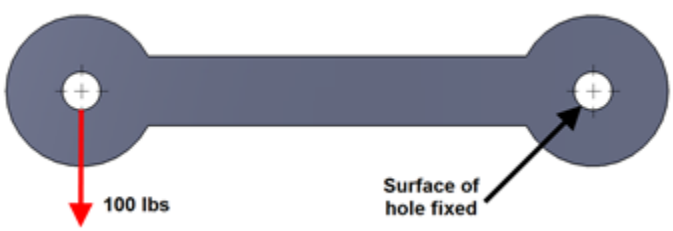

Using hand calculations and ANSYS Workbench, determine the strain measured by a 5.64 mm strain gauge centered at (3.3748, -0.09409, .375) away from the force and aligned in the y-direction.

Go to Step 1: Pre-Analysis & Start-Up
Go to all ANSYS Learning Modules
See and rate the complete Learning Module