Plant Element Functions

How Plant Element Functions Work

Each of these functions take just enough arguments to fully define all dimensions of the object, the orientation of the object, and the location of the object. There is also an alternative function for each that also takes a vector of layers that the objects needs to be subtracted from as an argument. Below, the pictures show what point the origin defines on each element. The object is then rotated at the origin point given, according to an angle vector. In most cases, the angle vector will be three-dimensional. The first element in the angle vector defines a rotation along the z-axis, the second defines a rotation on the y-axis, and the last (if needed) defines a rotation on the x-axis. In the case of couplings and pipes, only a two-dimensional angle vector is needed, so the first element defines a rotation along the z-axis, and the second defines a rotation along the y-axis.

The below pictures also show how other dimensions of the element are calculated based on user inputs. In all cases:

1. The outer radius of a socket is given by OR.Fitting(ND)
2. The inner radius of a socket and outer radius of a pipe are both given by OR(ND)
3. The inner diameter of a pipe is given by ID(ND, EN)

where ND is the nominal diameter (industry standard) of the pipe and EN is the pipe specification, both given by the user. Origin points are shown as a **pink** dot, and all default orientations are given in top view.

MaleAdapterF(OriginPoint, AngleVector, ND, EN)

This function only requires a 2-dimensional angle vector.

Default Orientation

Right Side

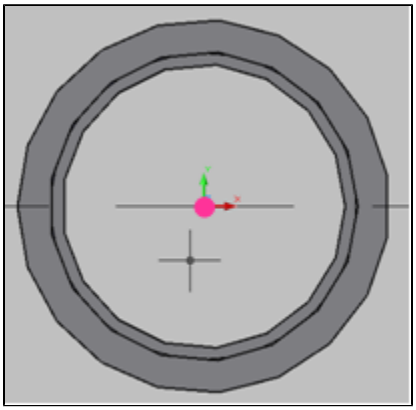

ChannelDrawing(Channel.Origin, Channel.Dim, thickness)

The channel has a uniform thickness. The x-dimension may be given as either positive or negative. The y-coordinate must define the inner bottom of the channel, and the z-coordinate must define the elevation of the inner corner (excluding the thickness of the channel floor). As a result, the y- and z-dimensions must be given as positive.

Default Orientation

Southwest Isometric View

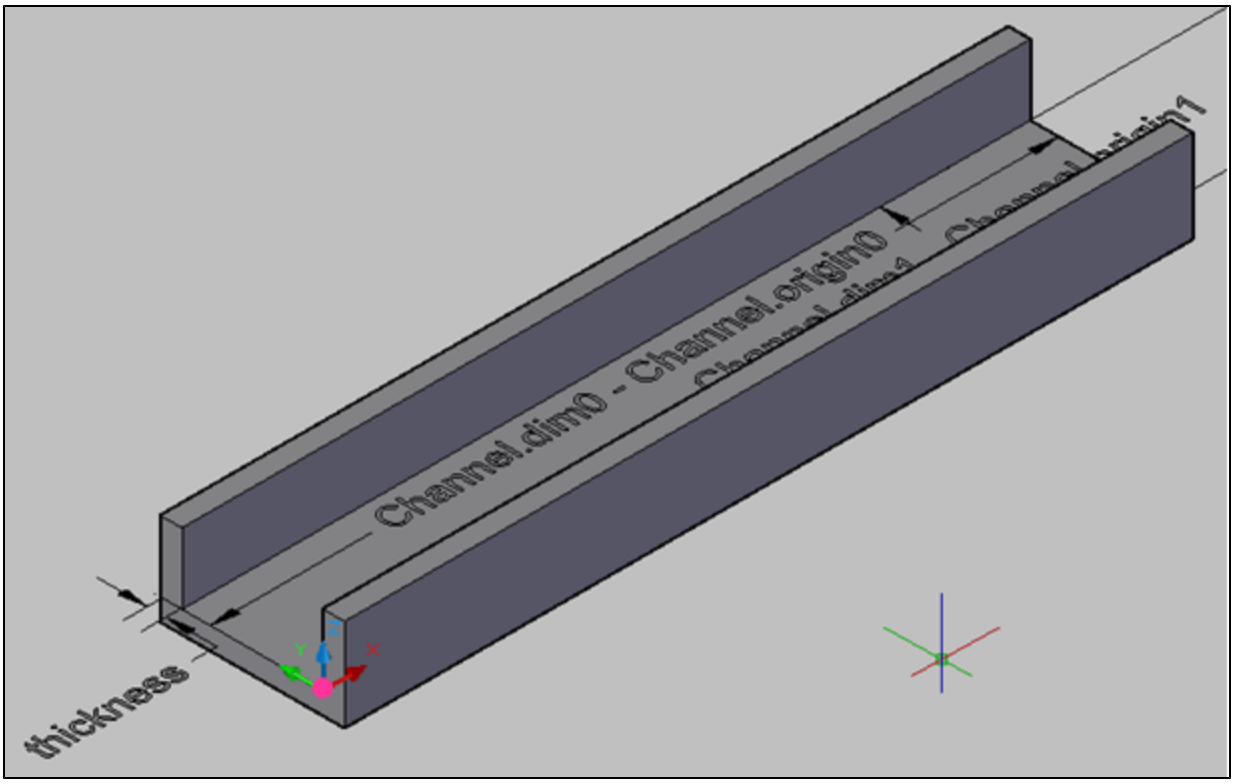

CouplingF(OriginPoint, AngleVector, ND, EN)

This function only needs a 2-dimensional angle vector.

Default Orientation

Right Side

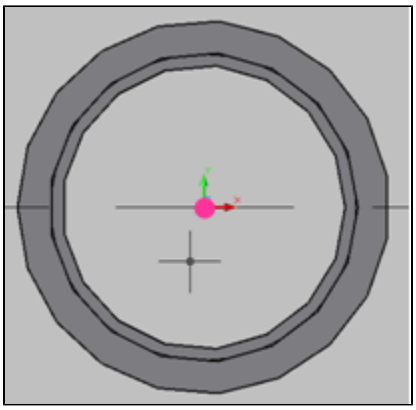

CrossF(OriginPoint, AngleVector, ND, EN)

Default Orientation

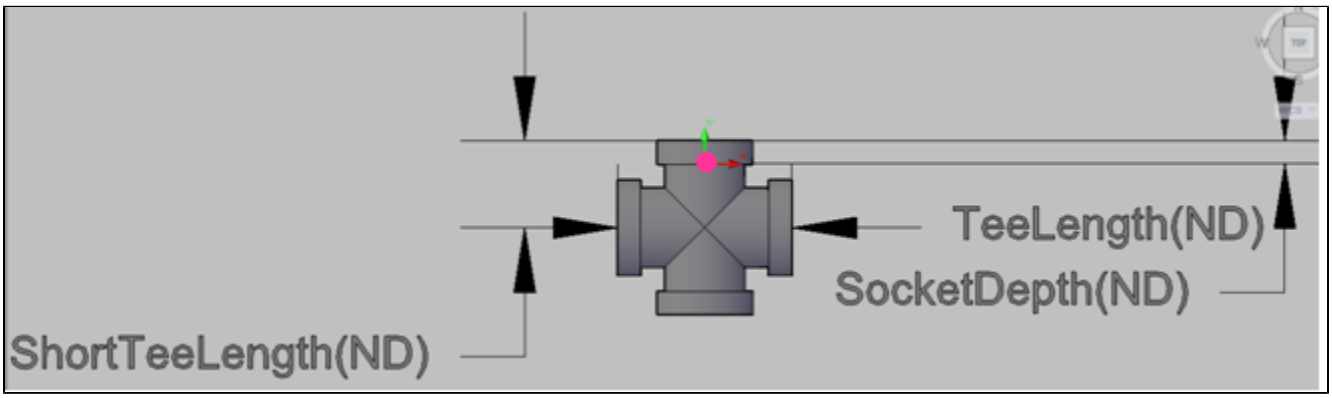

Back Side

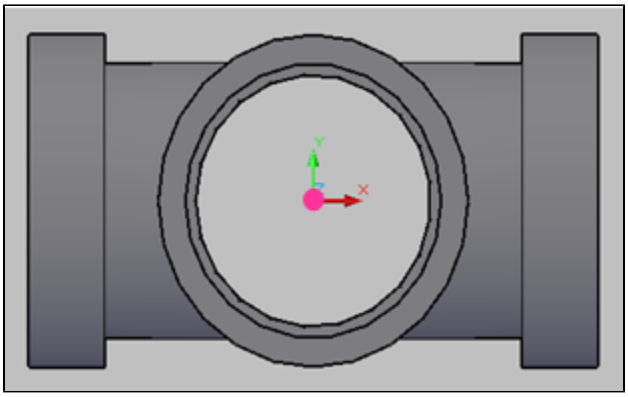

ElbowF(OriginPoint, AngleVector, ND, EN)

Default Orientation

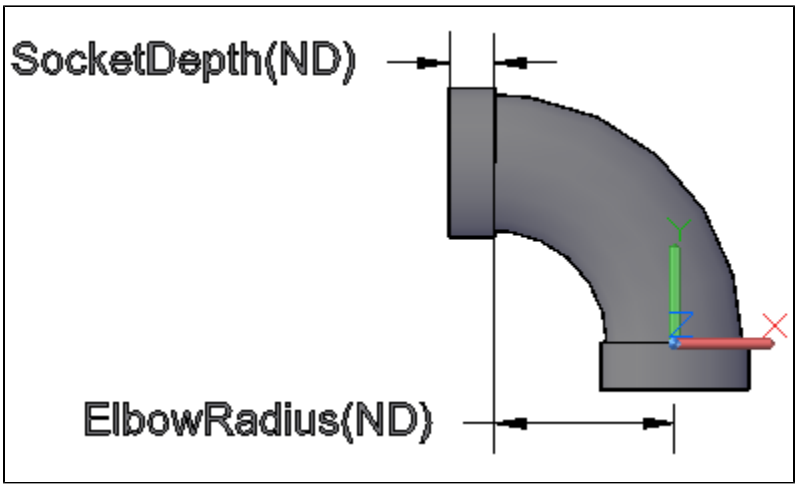

Front Side

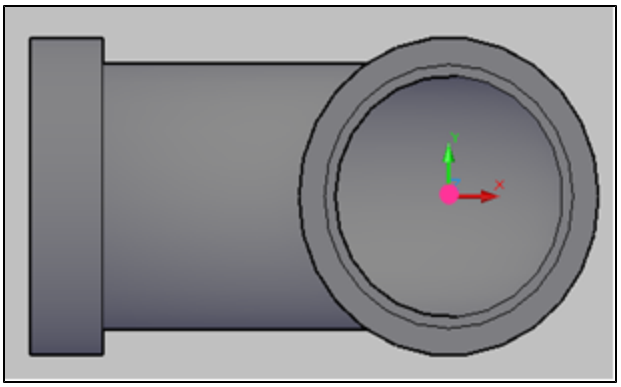

PipeF(OriginPoint, Length, AngleVector, ND, EN)

The origin will define the right side of the pipe. A positive length must be used for the function to work. This function only needs a 2-dimensional angle vector.

Default Orientation

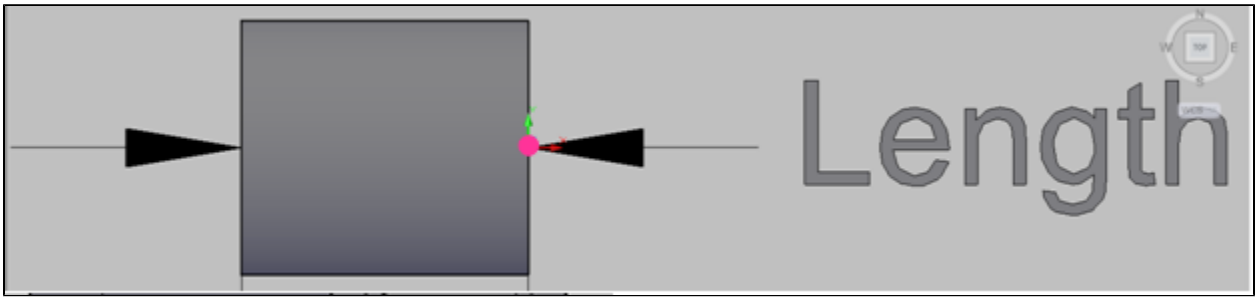

Right Side

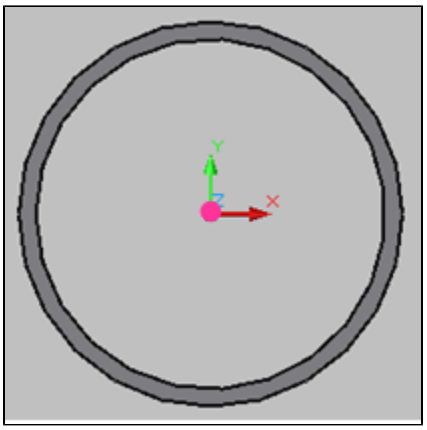

CapF(OriginPoint, AngleVector, ND)

The right side of the cap is the closed part. The origin is on the inner side of the cap.

Default Orientation

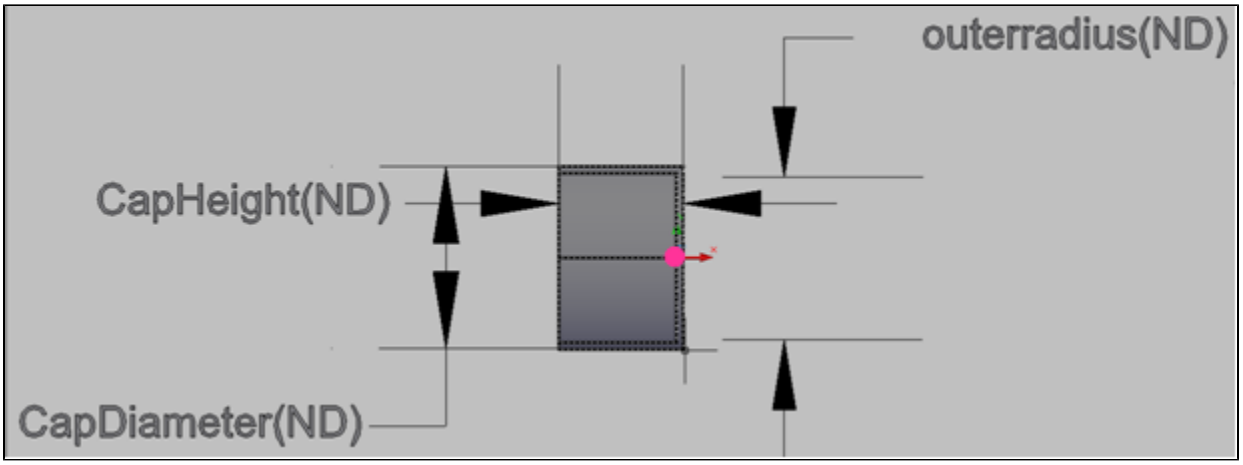

Southwest Isometric View

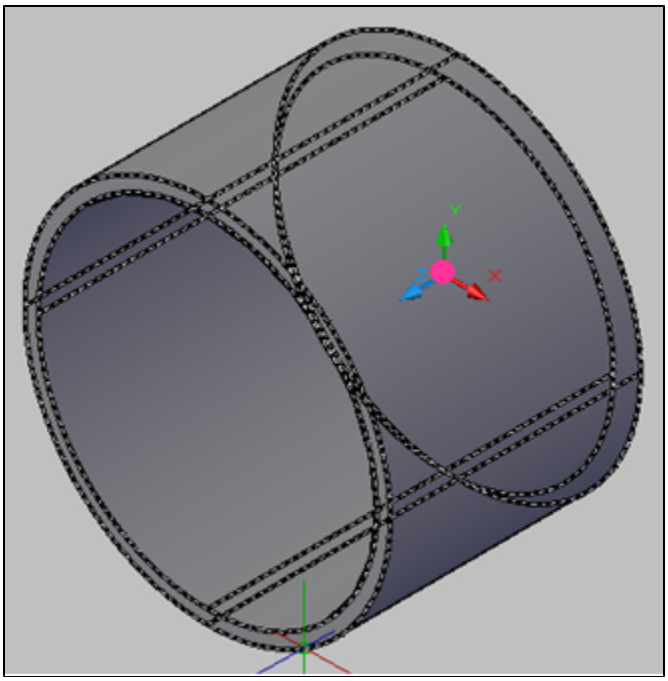

Tank(Tank.Origin, Tank.Dim, thickness)

The origin of the tank must be the bottom right corner, just above the floor thickness. The dimensions must be specified in positive numbers only. The tank has uniform thickness.

Default Orientation

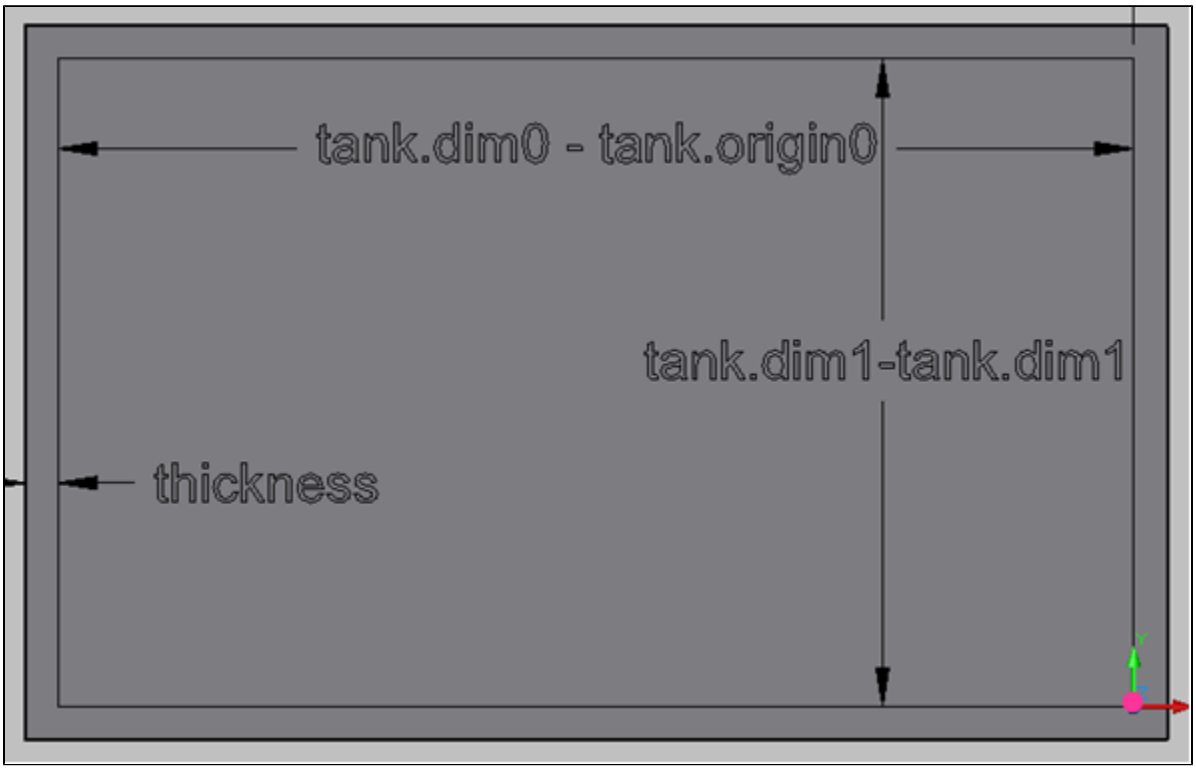

Southwest Isometric View

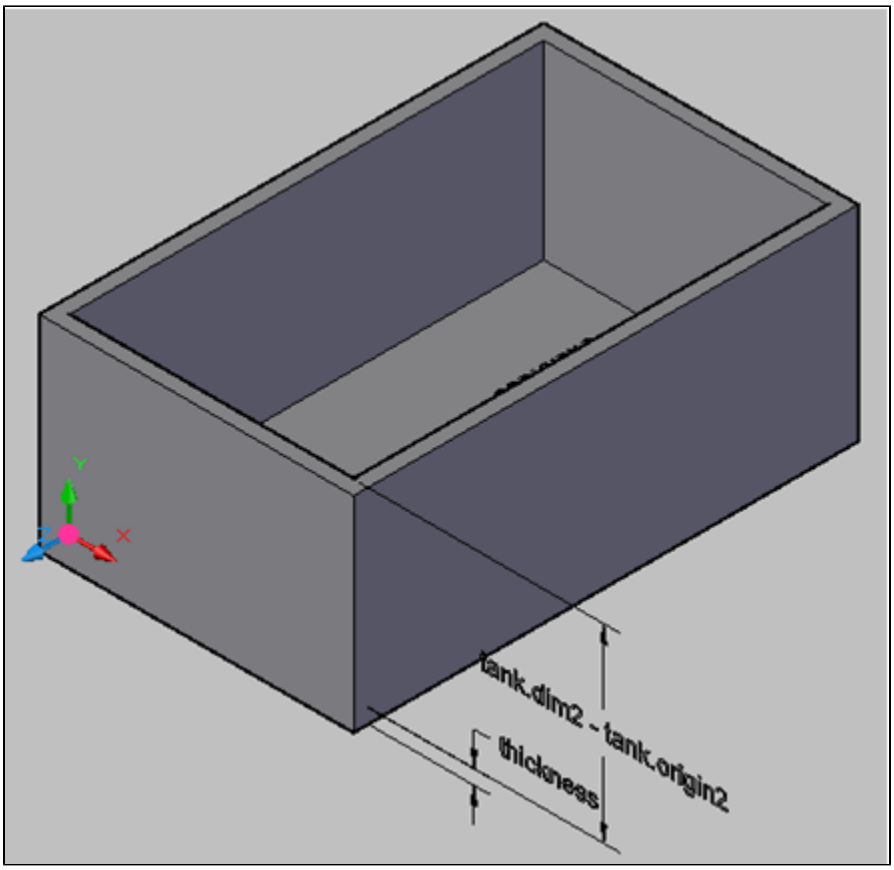

TeeF(OriginPoint, AngleVector, ND, EN)

Default Orientation

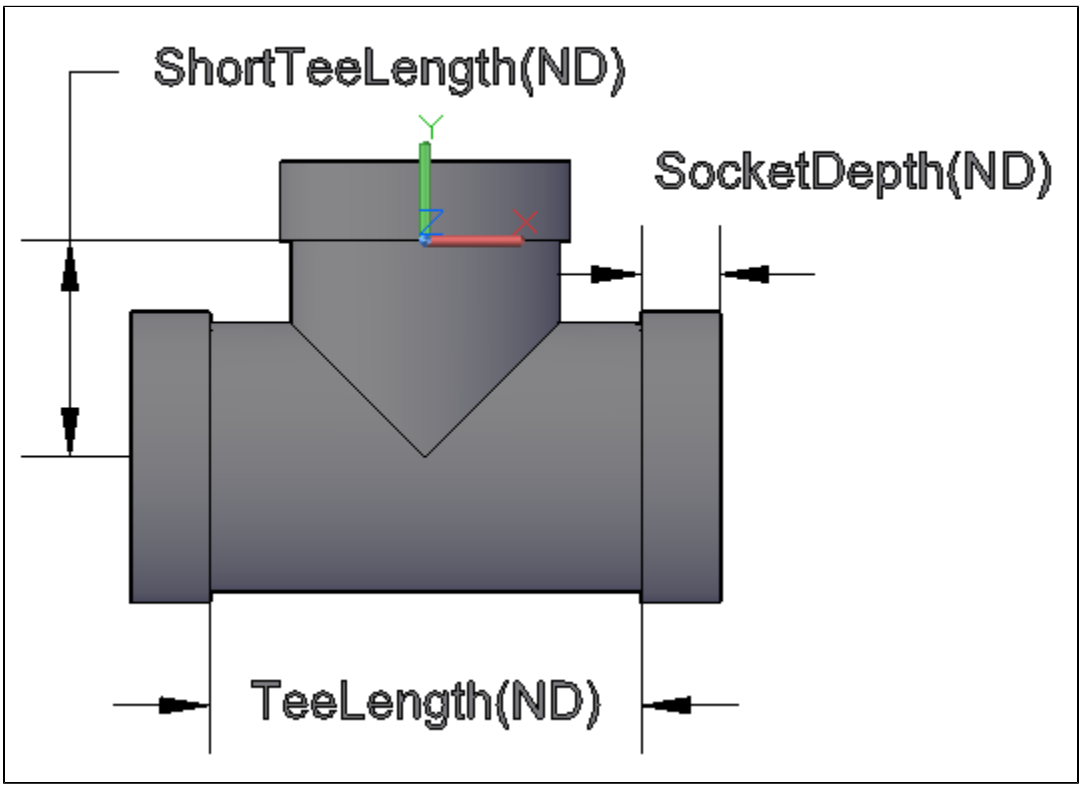

Back Side

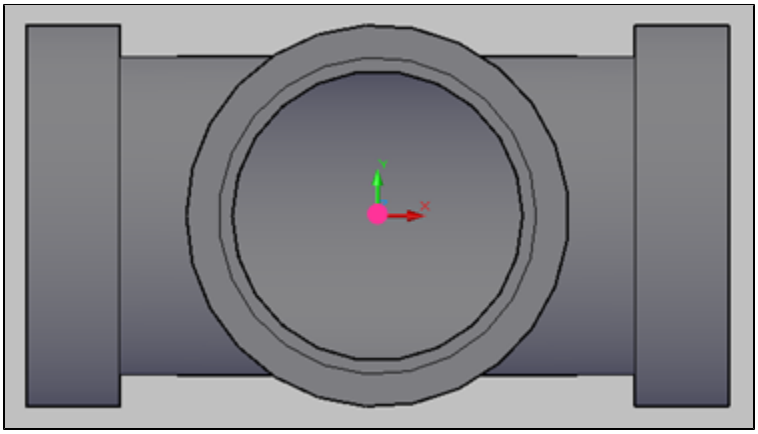

Interested in downloading this file for your reference?

Enter the attachments tab to find the Word document.